eDART
KNIFE GATE
VALVES

E-PUB-01-0020_V01

eDART Knife Gate Valve, medium sized on a uranium ore application

eDART KNIFE GATE VALVES

eDART offers a range of metal-seated knife gate valves to excel in challenging slurry environments. These valves are especially well-suited for demanding conditions, particularly in instances involving larger pipe sizes and pressures.

Our poly-lined valves retain the same robust and durable attributes, but they are specifically tailored for low-pressure applications and bi-directional requirements. These valves are optimised to achieve tight shut-off and bi-directional flow.

> ***This versatility in valve offerings ensures effective solutions across a spectrum of application requirements.***

HEAVY DUTY DESIGN

The heavy-duty one-piece body ensures the valve resists pipe expansion and pipe misalignment – fewer pipe supports are needed.

An extra thick heavy-duty gate extends the valve's life and is less vulnerable to slurry hammer. The gate is precision ground so a good gland seal is obtained and the gate doesn't need to be manually scrubbed after the valve has been operated.

eDART Knife Gate Valve, guide and support wedges shown on the metal seated version

eDART Knife Gate Valve, chamfered gate fully retracted out of the flow in the open position

eDART Knife Gate Valve, this valve is small enough to keep stock

The robust pedestal supports the actuator and gate even at awkward angles and is large enough that the maintenance crew have adequate access to tightening the gland. Instrumentation mounting points are standard.

The sacrificial deflection cone for the metal seated version protects the seat from premature wear by lifting the flow over the metal seat to protect it from the destructive action of the slurry. It is made from a hard 60 Rockwell high chrome material designed to be resistant to erosion and easily replaceable.

> ***Guards can be added to protect the moving parts from debris and to protect personnel from injury.***

EDART | C-TECH METAL SEATED KNIFE GATE VALVES

- **Size:** 80 - 800NB and larger on request
- **Pressure Rating:** PN10, PN16, PN25, PN40
- Robust one-piece body
- Rigid pedestal for smooth gate operation
- Wide range of materials of construction available
- Complete range of actuator options
- Precision ground, thick gate to resist pressure distortions
- ASME Class II (0.5% Cv) and ASME Class IV (0.1% Cv) leakage
- Valve seal/seat protected by deflection cone

C-TECH

ACTUATOR

Designed and engineered to be correctly sized for the application.

Options:

- Pneumatic
- Hydraulic
- Handwheel
- Gearbox
- Electric

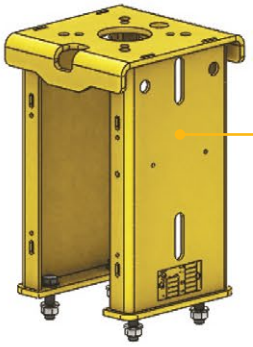

PEDESTAL

Robust for extra support of actuator and gate. Instrumentation mounting points are standard.

Options:

- Lockable open or closed
- Safety guards to remove pinch point hazard

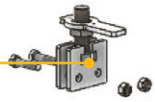

CLEVIS

The clevis provides rigid coupling between the actuator shaft and the gate. Two bolt attachments prevent gate misalignment due to pivoting and ensure smooth cycling operation.

GATE

Extra thick gate extends life and manages fluid hammer. Precision ground to create a better seal and doesn't need to be scrubbed during operation.

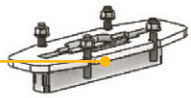

GLAND

Designed for safe and easy access to tighten during maintenance.

PACKING

Various packings to suit abrasive, corrosive as well as high-temperature applications.

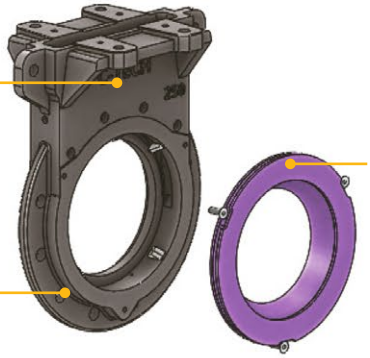

BODY

Robust one-piece body resists pipe expansion and pipe misalignments. Fewer pipe support is needed.

SEAT SEAL

For improved shut-off.

DEFLECTION CONE

Sacrificial hard chrome wear cone protects the seat from premature wear by diverting the media from the sealing surface.

Easy to replace once worn.

DEFLECTION CONE AND CFD DESIGN

The deflection cone lifts the flow over the metal seat to protect it from the destructive action of the slurry. It is made from a hard 60 Rockwell high chrome material to be resistant to erosion and easily replaceable. The deflection cone is the primary replacement spare component for the valve.

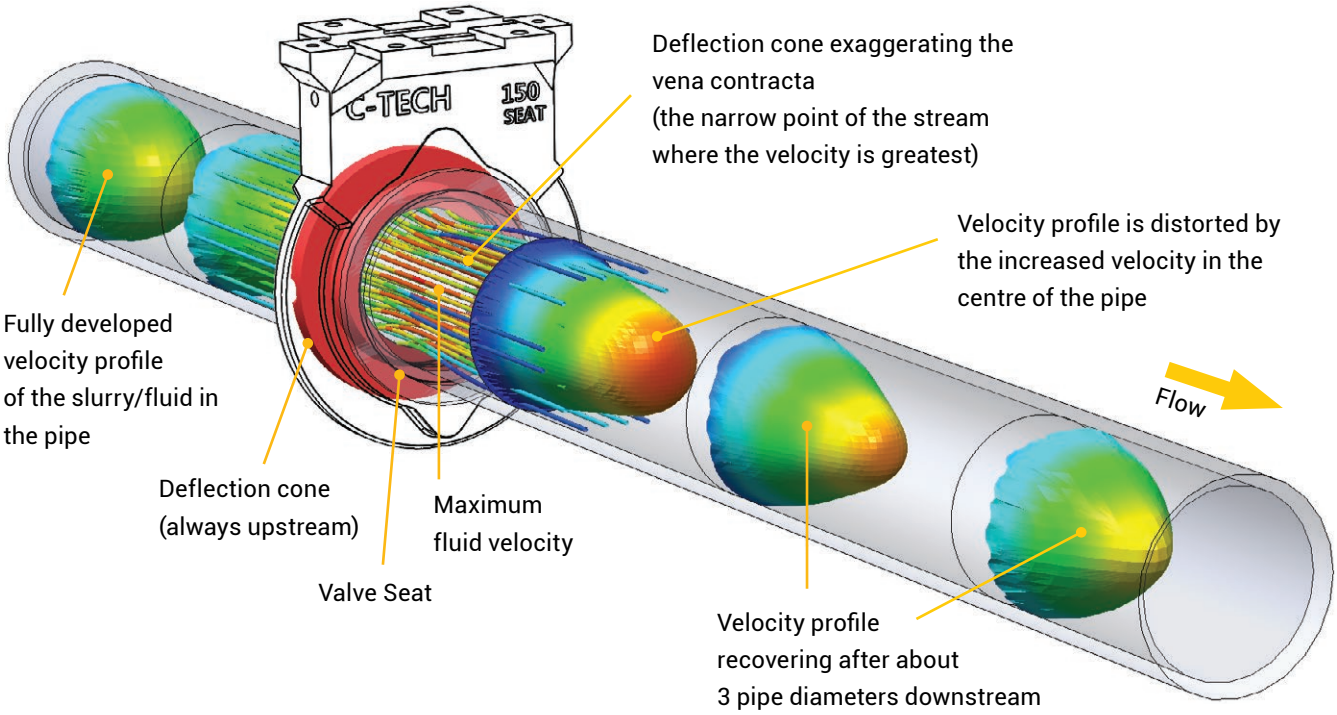

- The deflector cone is always installed upstream.
- The valve is always orientated so that the line pressure pushes the gate into the seat when closed.

CFD PRESSURE PROFILE OF EDART KNIFE GATE VALVE

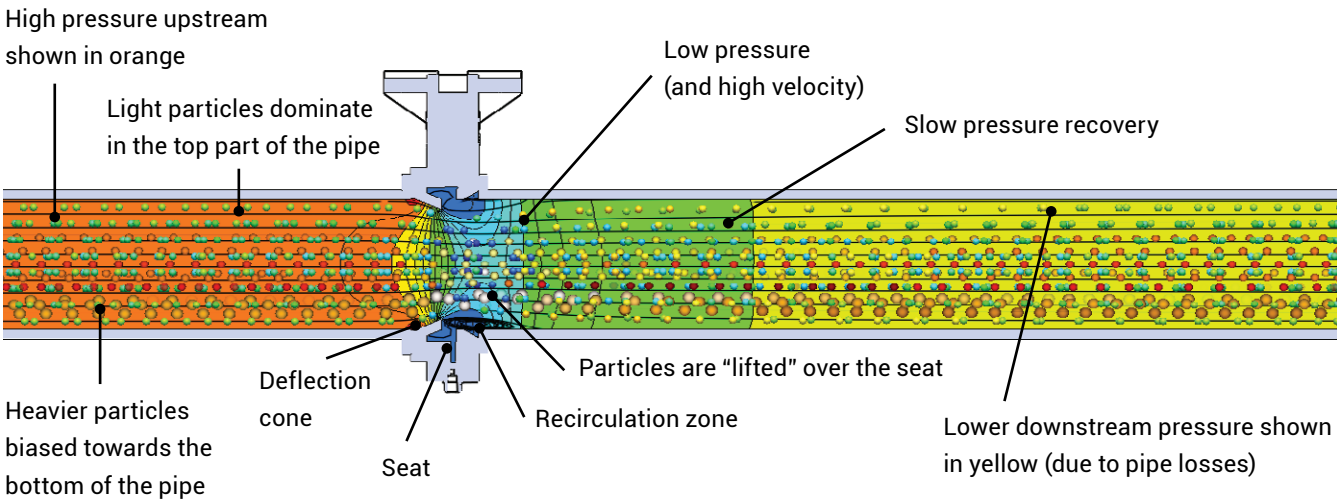

C-TECH KNIFE GATE VALVES TECHNICAL SPECIFICATIONS

All valves are shell tested and leak tested to procedures based on the Manufacturers Standardisation Society of the Valve and Fittings Industry (MSS) standards.

Pressure Ratings
PN10
PN16
PN25
PN40

Flange Drilling
SANS1123 T/1000; T1600; T2500; T4000
BS4504 T10; T16
BS10 Table D; Table E
ASME 150#
AS 2129 Table D; Table E

MATERIALS OF CONSTRUCTION

Part	Material Options	
Body	SG42 CF8M (Stainless Steel)	SAF2205 Other materials on request
Pedestal	Mild Steel, [Phenoline I epoxy] painted Stainless Steel 316	
Packing	Impregnated Cotton PTFE High temperature packing (HT Inconel reinforced graphite)	
Gate	Stainless Steel 304 Stainless Steel 316	SAF2205 Other materials on request
Deflection Cone	Cast High-Chrome (27% Cr BS4844) with soft poly gaskets Cast High-Chrome (27% Cr BS4844) without poly	Hard Polyurethane with soft poly gaskets SAF2205 or CF8M (316 Stainless Steel)
Seat Seal	• BunaN • Viton	

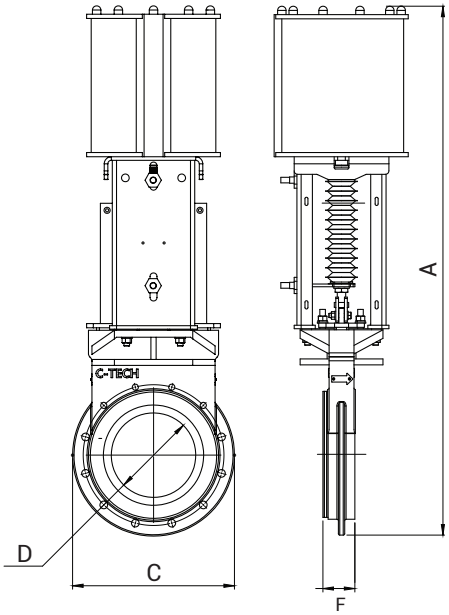

(Face-to-Deflection Cone)

OVERALL DIMENSIONS FOR 10 + 16 BAR RATED VALVES

NB Size			PN10			PN16		
Inch	mm	D	F	C	A	F	C	A
4	100	80	69	220	736	69	225	736
6	150	120	75	285	947	75	285	947
8	200	165	88	340	1136	88	340	1186
10	250	193	88	395	1345	88	420	1345
12	300	240	94	445	1507	101	475	1507
14	350	292	94	505	1703	101	525	1836
16	400	339	110	565	1971	116	600	1973
18	450	387	110	615	2120	137	640	2196
20	500	426	137	670	2422	144	715	2427
24	600	516	143	780	2736	169	840	2735
28	700	605	160	895	3302	173	910	3337
30	750	650	173	965	3394			
32	800	700	156	1015	3540			

eDART | POLY LINED KNIFE GATE VALVES

- **Size:** 80-1,000NB (and larger on request)
- **Pressure Rating:** up to PN10
- Suitable for heavy duty slurry applications
- Robust one piece cast body to resist pipe expansion and misalignment, and requires fewer pipe supports
- Rigid pedestal for smooth gate operation at all mounting angles
- Safety guards to enclose moveable elements and prevent accidental injury to people
- Optional padlockable lock-out in closed position for added safety during maintenance
- Valve internal diameter closely matches pipe ID due to polyurethane casting inside the valve
- Easily mounted proximity switches for digital end of stroke information
- Optional positioner with internal feedback for rate or ramp controlled operation
- Handwheel or gearbox actuation available for seldomly used and remote applications
- Pneumatically actuator for rapid response and plant automation
- Optimised for use on the eDART flotation bypass system

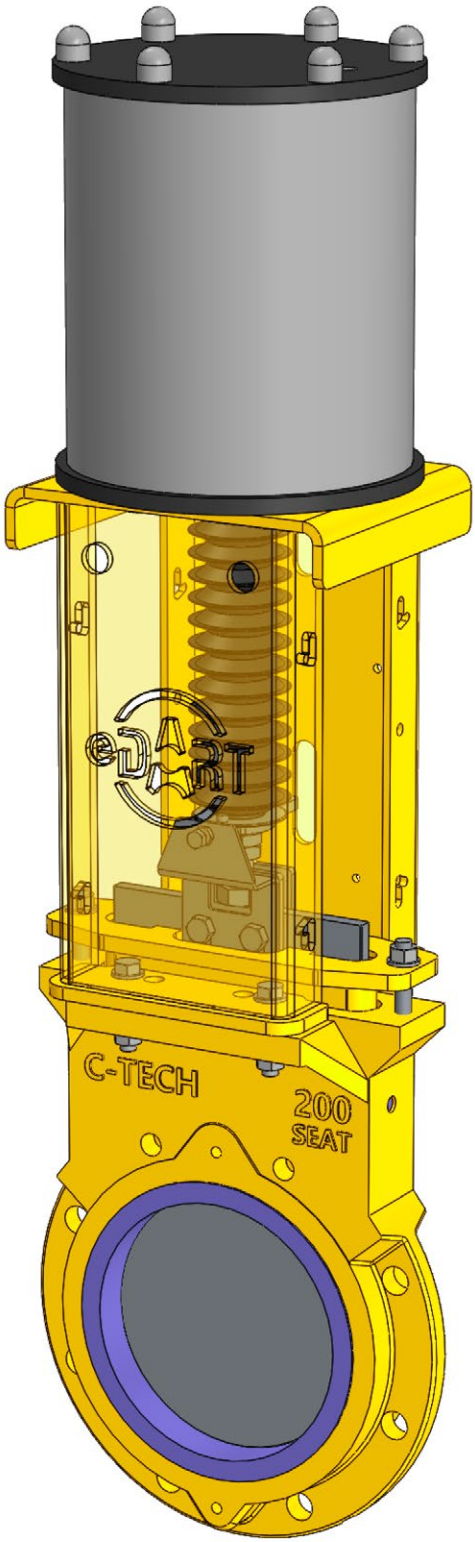

C-TECH

POLY LINED KNIFE GATE VALVES TECHNICAL SPECIFICATIONS

All valves are shell tested and leak tested to procedures based on the Manufacturers Standardisation Society of the Valve and Fittings Industry (MSS) standards.

Pressure Rating
PN10

Flange Drilling
SANS1123 T/1000
BS4504 T10
BS10 Table D; Table E
ASME 150#
AS 2129 Table D; Table E

MATERIALS OF CONSTRUCTION

Part	Material Options
Body	SG42 CF8M (Stainless Steel) SAF2205
Pedestal	Mild Steel, [Phenoline | epoxy] painted Stainless Steel 316
Packing	Impregnated Cotton PTFE High temperature packing (HT Inconel reinforced graphite)
Gate	Stainless Steel 304 Stainless Steel 316 SAF2205
Seal	Polyurethane is moulded into the body with a gate in place, this fills the chest cavity and lines the body where the valve fits into the line

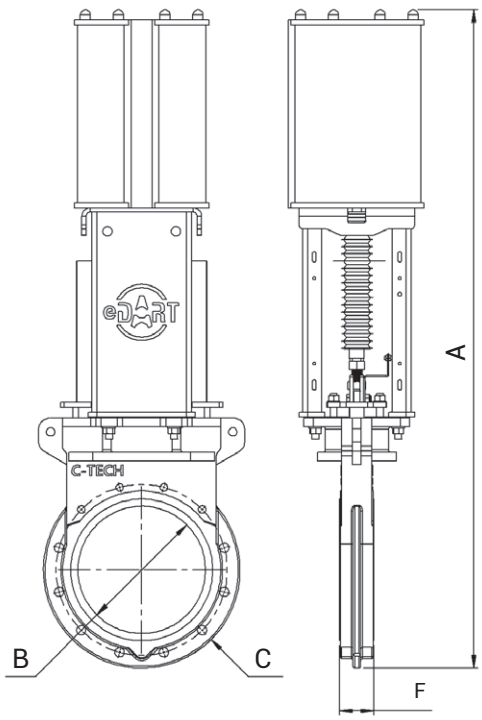

OVERALL DIMENSIONS

NB Size		PN10			
Inch	mm	A	B	C	F
4	100	736	98	225	54.8
6	150	929	148	285	
8	200	1136	198	340	
10	250	1343	248	410	
12	300	1507	298	460	
14	350	1683	348	525	
16	400	1956	398	585	
18	450	2120	448	635	
20	500	2386	498	715	
24	600	2735	598	835	
28	700	3302	698	915	
32	800	3570	798	1035	
36	900	3570	898	1123	
40	1000	4000	998	1230	

TALK TO US ABOUT SOLVING YOUR SLURRY-RELATED CHALLENGES

eDART designs and manufactures slurry equipment to improve recovery rates for metallurgical plants. We combine our Computational Fluid Dynamics (CFD) expertise with extensive site experience to reliably solve your complex slurry challenges.

How can we help you?

eDART GROUP SA (PTY) LTD

7 Industrial Road, Kya Sand, Gauteng, South Africa.

OFFICE HRS: Mon to Thur: 7am - 5pm | Fri: 7am - 2pm | Sat to Sun: Closed

E: info@edart.group | T: +27 11 791 1411

www.edart.group

QAS INTERNATIONAL
ISO 9001:2015
REGISTERED COMPANY
Certificate No. SA1837

ISO 9001 is the internationally recognised standard for the quality management of businesses.